sutton®

CHAMFERING

• Chamfering Endmills • Countersinks

Chamfering Finder

sutton

ISO	VDI	Material Group	Sutton	
P	A	Steel	N	UNI
M	R	Stainless Steel	VA	
K	F	Cast Iron	GG	
N	N	Non-Ferrous Metals, Aluminiums & Coppers	Al / W	
S	S	Titaniums & Super Alloys	Ti	Ni
H	H	Hard Materials (≥ 45 HRC)	H	

^ VDI 3323 material groups can also be determined by referring to the material cross reference listing in the application guide at the back of this catalogue.

	Chamfers			Countersinks		
Page	381	382	383	384	384	385
Catalogue Code	E456	E457	E458	C107	C108	C110
Type of Cut: *Slotting*						
Finishing	●	●	●			
Universal						
Trochoidal/Dynamic						
Roughing						
Ramping						
Profiling						
Countersinking				●	●	●
Material	VHM			HSS Co		VHM
Surface Finish	*TiAlN*			*Brt*	*TiAlN*	*TiAlN*
Sutton Designation	N			N	UNI	UNI
Standard	-			DIN 335		
Shank Tolerance	h6			h9		h8

ISO	VDI 3323	Material		Condition	HB	N/mm²	381	382	383	384	384	385
P	1	Steel - Non-alloy, cast & free cutting	- 0.15 %C	A	125	440	●	●	●			●
	2		- 0.45 %C	A	190	640	●	●	●			●
	3			QT	250	840	●	●	●			●
	4		- 0.75 %C	A	270	910	●	●	●			●
	5			QT	300	1010	●	●	●			●
	6	Steel - Low alloy & cast < 5% of alloying elements		A	180	610	●	●	●			●
	7			QT	275	930	●	●	●			●
	8			QT	300	1010	●	●	●			●
	9			QT	350	1180	○	○	○			●
	10	Steel - High alloy, cast & tool		A	200	680	●	●	●			●
	11			HT	325	1100	○	○	○			●
	12	Steel - Corrosion resistant & cast	Ferritic / Martensitic	A	200	680	●	●	●			●
	13		Martensitic	QT	240	810	○	○	○			●
M	14.1	Stainless Steel	Austenitic	AH	180	610	●	●	●			●
	14.2		Duplex		230	780	●	●	●			●
	14.3		Precipitation Hardening		300	780	●	●	●			●
K	15	Cast Iron - Grey (GG)	Ferritic / Pearlitic		180	610	●	●	●			●
	16		Pearlitic		260	880	●	●	●			●
	17	Cast Iron - Nodular (GGG)	Ferritic		160	570	●	●	●			●
	18		Pearlitic		250	840	●	●	●			●
	19	Cast Iron - Malleable	Ferritic		130	460	●	●	●			●
	20		Pearlitic		230	780	●	●	●			●
N	21	Aluminum & Magnesium - wrought alloy	Non Heat Treatable		60	210	●	●	●	●	●	●
	22		Heat Treatable	AH	100	360	●	●	●	●	●	●
	23	Aluminum & Magnesium - cast alloy ≤12% Si	Non Heat Treatable		75	270	●	●	●	●	●	●
	24		Heat Treatable	AH	90	320	●	●	●	●	●	●
	25	Al & Mg - cast alloy >12% Si	Non Heat Treatable		130	460	○	○	○	○	●	●
	26	Copper & Cu alloys (Brass/Bronze)	Free cutting, Pb > 1%		110	390	○	○	○	○	●	●
	27		Brass (CuZn, CuSnZn)		90	320	○	○	○		●	●
	28		Bronze (CuSn)		100	360	○	○	○	○	●	●
	29	Non-metallic - Thermosetting & fiber-reinforced plastics										●
	30	Non-metallic - Hard rubber, wood etc.										●
S	31	High temp. alloys	Fe based	A	200	680	●	●	●			●
	32			AH	280	950	●	●	●			●
	33		Ni / Co based	A	250	840	●	●	●			●
	34			AH	350	1180	●	●	●			●
	35			C	320	1080	●	●	●			●
	36	Titanium & Ti alloys	CP Titanium		400 MPa		●	●	●			●
	37.1		Alpha alloys		860 MPa		●	●	●			●
	37.2		Alpha / Beta alloys	A	960 MPa		●	●	●			●
	37.3			AH	1170 MPa		●	●	●			●
	37.4		Beta alloys	A	830 MPa		●	●	●			●
	37.5			AH	1400 MPa		●	●	●			●
H	38.1	Hardened steel		HT	45 HRC		●	●	●			●
	38.2			HT	55 HRC		○	○	○			●
	39.1			HT	58 HRC							●
	39.2			HT	62 HRC							●
	40	Cast Iron	Chilled	C	400	1350	●	●	●			
	41			HT	55 HRC							

Condition: **A** (Annealed), **AH** (Age Hardened), **C** (Cast), **HT** (Hardened & Tempered), **QT** (Quenched & Tempered)

● Optimal ○ Effective

Chamfers Carbide, 4 Flute 90°

sutton

- For chamfering & deburring component edges
- Straight flute for smooth cutting
- 90° form
- TiAlN for longer tool life

Fraise 4 dents carbure, à chanfreiner 90°
- Pour le chrafreinage et cassage d'angles
- Goujures droites, coupe douce
- Angle 90°
- Revêtement TiAlN pour une meilleure durée de vie

Frese metallo duro, Svasatori, 4 Taglienti 90°
- Fresatura di smussi e sbavature
- Tagliente dritto e liscio
- Inclinazione tagliente 90°
- TiAlN per Ottimizzare vita utensile

Fresas de MD, Avellanado, 4 ranuras 90°
- Para biselar y desbarbar bordes de componentes
- Ranuras rectas para un corte suave
- Forma 90°
- TiAlN para una mayor vida útil de la herramienta

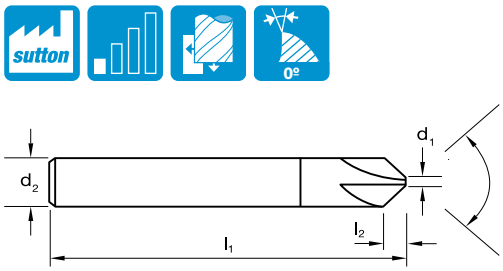

Catalogue Code	E456
Discount Group	B0210
Material	VHM
Surface Finish	TiAlN
Sutton Designation	N
Geometry	90°
Shank Form (DIN 6535)	HA
Shank Tolerance	h6

Vc Page #: 445 ➔

Size Ref.	l_2	l_1	d_1	d_2	z	Item #
0600	**2.4**	57	1.2	6	4	E456 0600
0800	**3.2**	63	1.6	8	4	E456 0800
1000	**4.0**	72	2.0	10	4	E456 1000
1200	**4.8**	83	2.4	12	4	E456 1200

ISO	P												M			K						N									S										H					
VDI 3323	1	2	3	4	5	6	7	8	9	10	11	12	13	14.1	14.2	14.3	15	16	17	18	19	20	21	22	23	24	25	26	27	28	29	30	31	32	33	34	35	36	37.1	37.2	37.3	37.4	37.5	38.1	38.2	39.1	39.2	40	41
E456	●	●	●	●	●	●	●	●	○	●	○	●	○	●	●	●	●	●	●	●	●	●											●	●	●	●	●	●	●	●	●	●	●	●	○			●	

P Steel M Stainless Steel K Cast Iron N Non-Ferrous Metals S Titanium & Super Alloys H Hard Materials

● Optimal ○ Effective

Chamfers Carbide, 4 Flute 60°

- For chamfering & deburring component edges
- Straight flute for smooth cutting
- 60° form
- TiAlN for longer tool life

Fraise 4 dents carbure, à chanfreiner 60°
- Pour le chrafreinage et cassage d'angles
- Goujures droites, coupe douce
- Angle 60°
- Revêtement TiAlN pour une meilleure durée de vie

Frese metallo duro, Svasatori, 4 Taglienti 60°
- Fresatura di smussi e sbavature
- Tagliente dritto e liscio
- Inclinazione tagliente 60°
- TiAlN per Ottimizzare vita utensile

Fresas de MD, Avellanado, 4 ranuras 60°
- Para biselar y desbarbar bordes de componentes
- Ranuras rectas para un corte suave
- Forma 60°
- TiAlN para una mayor vida útil de la herramienta

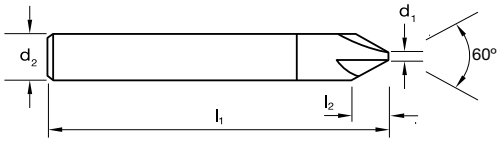

Catalogue Code	E457
Discount Group	B0210
Material	VHM
Surface Finish	*TiAlN*
Sutton Designation	N
Geometry	60°
Shank Form (DIN 6535)	HA
Shank Tolerance	h6

Vc Page #: 445 →

Size Ref.	l_2	l_1	d_1	d_2	z	Item #
0600	3.8	57	1.2	6	4	E457 0600
0800	5.5	63	1.6	8	4	E457 0800
1000	6.9	72	2.0	10	4	E457 1000
1200	8.3	83	2.4	12	4	E457 1200

ISO	P												M			K						N									S										H					
VDI 3323	1	2	3	4	5	6	7	8	9	10	11	12	13	14.1	14.2	14.3	15	16	17	18	19	20	21	22	23	24	25	26	27	28	29	30	31	32	33	34	35	36	37.1	37.2	37.3	37.4	37.5	38.1	38.2	39.1	39.2	40	41
E457	●	●	●	●	●	●	●	●	○	●	○	●	○	●	●	●	●	●	●	●	●	●											●	●	●	●	●	●	●	●	●	●	●	●	○			●	

P Steel M Stainless Steel K Cast Iron N Non-Ferrous Metals S Titanium & Super Alloys H Hard Materials

● Optimal ○ Effective

Chamfers Carbide, 4 Flute, Corner Rad

sutton

- For chamfering & deburring component edges
- Straight flute for smooth cutting
- Radius for corner rounding
- TiAlN for longer tool life

Fraise 4 dents carbure, à rayons
- Pour le chrafreinage et cassage d'angles
- Goujures droites, coupe douce
- Rayons suivant diamètres
- Revêtement TiAlN pour une meilleure durée de vie

Frese metallo duro, Svasatori, 4 Taglienti, Toriche
- Fresatura di smussi e sbavature
- Tagliente dritto e liscio
- Affilatura concava del tagliente per angoli raggiati
- TiAlN per Ottimizzare vita utensile

Fresas de MD, Avellanado, 4 ranuras, Tórica
- Para biselar y desbarbar bordes de componentes
- Ranuras rectas para un corte suave
- Radio para redondear esquinas
- TiAlN para una mayor vida útil de la herramienta

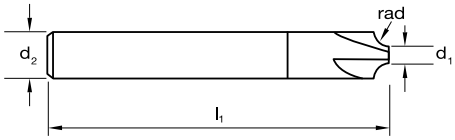

Catalogue Code	E458
Discount Group	B0210
Material	VHM
Surface Finish	TiAlN
Sutton Designation	N
Geometry	Rad
Shank Form (DIN 6535)	HA
Shank Tolerance	h6

Vc Page #: 445 ➔

Size Ref.	rad	d_1	l_1	d_2	z	Item #
0605	0.5	5.0	57	6	4	E458 0605
0610	1	4.0	57	6	4	E458 0610
0815	1.5	5.0	63	8	4	E458 0815
0820	2	4.0	63	8	4	E458 0820
1025	2.5	5.0	72	10	4	E458 1025
1030	3	4.0	72	10	4	E458 1030
1235	3.5	5.0	83	12	4	E458 1235
1240	4	4.0	83	12	4	E458 1240

ISO	P												M			K						N									S										H					
VDI 3323	1	2	3	4	5	6	7	8	9	10	11	12	13	14.1	14.2	14.3	15	16	17	18	19	20	21	22	23	24	25	26	27	28	29	30	31	32	33	34	35	36	37.1	37.2	37.3	37.4	37.5	38.1	38.2	39.1	39.2	40	41
E458	●	●	●	●	●	●	●	●	○	●	○	●	○	●	●	●	●	●	●	●	●	●											●	●	●	●	●	●	●	●	●	●	●	●	○			●	

P Steel M Stainless Steel K Cast Iron N Non-Ferrous Metals S Titanium & Super Alloys H Hard Materials

● Optimal ○ Effective

Chamfers HSS, Three Flute, 90°, DIN 335

sutton

- De-burring
- Countersinking / Counterboring screw holes
- Chamfering of tapping holes
- For use in machine applications Type N - For non-ferrous, Type UNI - For difficult to machine materials

Fraises à chanfreiner 3 dents 90°, DiN 335
- Ebavurage de trous
- Ebavurage et réalisation de fraisurage de tête de vis
- Chanfreins de trous taraudés
- Utilisations sur machines, Type N pour les matériaux non-ferrous, Type UNI pour les matériaux jusqu'à 850N/mm²

Svasatori Tre Taglienti, 90°, DIN 335
- Sbavatore
- Svasatore/ Svasatore per testa viti
- Smussatore per fori da filettare
- Per lavorazioni su macchina CN Tipo N - Materiali non ferrosi, Tipo UNI - per materiali di difficile lavorabilità

Avellanadores de tres labios, 90°, DIN 335
- Desbarbado
- Avellanado y Biselado de agujeros
- Avellanado de agujeros para roscas
- Para uso en aplicaciones de máquina (Tipo N - no ferrosos), (Tipo UNI - Para materiales difíciles de mecanizar)

DIN 335

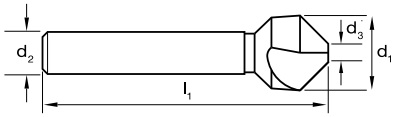

Vc Page #: 445 →

Catalogue Code	C107	C108
Discount Group	A1108	A1108
Material	HSS Co	HSS Co
Surface Finish	*Brt*	*TiAlN*
Sutton Designation	N	UNI
Point Type	90°	90°
Shank Tolerance	h9	h9

Size Ref.	d_1	Screw Head	l_1	d_2	d_3	Pieces	Item #	Item #
0430	4.3	M2	40	4	1.3		C107 0430	C108 0430
0530	5.3	M2.5	40	4	1.5		C107 0530	C108 0530
0630	6.3	M3	45	5	1.5		C107 0630	C108 0630
0730	7.3	M3.5	50	6	1.8		C107 0730	C108 0730
0800	8.0		50	6	2.0		C107 0800	C108 0800
0840	8.4	M4	50	6	2.0		C107 0840	C108 0840
0940	9.4	M5	50	6	2.2		C107 0940	C108 0940
1000	10.0		50	6	2.5		C107 1000	C108 1000
1040	10.4		50	6	2.5		C107 1040	C108 1040
1150	11.5	M6	56	8	2.8		C107 1150	C108 1150
1240	12.4		56	8	2.8		C107 1240	C108 1240
1340	13.4		56	8	2.9		C107 1340	C108 1340
1500	15.0		60	10	3.2		C107 1500	C108 1500
1650	16.5	M8	60	10	3.2		C107 1650	C108 1650
1900	19.0	M10	63	10	3.5		C107 1900	C108 1900
2050	20.5		63	10	3.5		C107 2050	C108 2050
2300	23.0		67	10	3.8		C107 2300	C108 2300
2500	25.0		67	10	3.8		C107 2500	C108 2500
3000	30.0		71	12	4.2		C107 3000	C108 3000
3100	31.0		71	12	4.2		C107 3100	C108 3100
	Set							
0004	6.3, 10.4, 16.5, 20.5					4	C107 0004	C108 0004

C107 0004

C108 0004

ISO	P													M			K						N										S												H					
VDI 3323	1	2	3	4	5	6	7	8	9	10	11	12	13	14.1	14.2	14.3	15	16	17	18	19	20	21	22	23	24	25	26	27	28	29	30	31	32	33	34	35	36	37.1	37.2	37.3	37.4	37.5	38.1	38.2	39.1	39.2	40	41
C107	●	●	●	●	○	●	●	○		○		○		●	●	○	●	○	●	●	○		●	●	●	●	○	●	○	○	○		○	○	○			○	○	○		○						●	
C108	●	●	●	●	●	●	●	●	○	●	○	●	●	●	●	●	●	●	●	●	●	●	○	○	●	●	●	●	●	●	○		○	○	○	○	○	○	○	○	○	○	○					●	

P Steel M Stainless Steel K Cast Iron N Non-Ferrous Metals S Titanium & Super Alloys H Hard Materials

● Optimal ○ Effective

- For Countersunk screws acc. to DIN 963, 964, 965, 966, 7513, 7516
- For Countersunk screws acc. to ISO 2009, 2010, 7046-1, 7046-2, 7047

Chamfers Indexable Countersink with Carbide Insert

- Suitable for both hand and machine operations
- 90° Standard Chamfer
- Chatter-free countersinking and de-burring
- Suitable for unstable machining at lower RPMs
- Carbide strip design provides excellent chamfering surface and better tool life

Fraise à chanfreiner à plaquettes
- Convient aux opérations manuelles et mécaniques
- Chanfrein standard à 90°
- Fraisage et ébavurage sans vibration
- Convient pour l'usinage instable
- La conception de la fraise offre d'excellent états de surfaces et une meilleure durée de vie de l'outil

Svasatore indicizzabile per smussatura con inserto in metallo duro
- Adatto per operazioni manuali e meccaniche
- Smusso standard a 90°
- Fresatura e sbavatura senza vibrazioni
- Adatto per lavorazioni instabili
- Il design della fresa offre un'eccellente finitura superficiale e una migliore durata dell'utensile

Avellanador indexable para biselar con inserto de carburo
- Adecuado para operaciones manuales y mecánicas
- Forma estándar de 90°
- Fresado y desbarbado sin vibraciones
- Adecuado para mecanizado inestable
- El diseño de la cortadora ofrece un excelente acabado superficial y una mejor vida útil de la herramienta

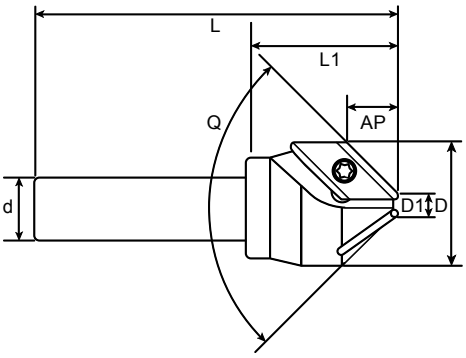

Catalogue Code	C110
Discount Group	A1402
Material	VHM
Surface Finish	*TiAlN*
Sutton Designation	UNI
Point Type	90°
Shank Tolerance	h8

Vc Page #: 445 ➔

Size Ref.	D1	D	d	L	AP	L1	Q	Cut	Insert Type	Item #
	Holder and Insert									
2290	5.5	22	10	65	8	27	90°	1	Small	C110 2290
3690	15	36	12	78	10	38	90°	1	Large	C110 3690
	Replacement Inserts									
2210	Countersink Carbide Inserts SMALL								Small	C110 2210
3610	Countersink Carbide Inserts LARGE								Large	C110 3610

ISO	P												M			K						N									S										H					
VDI 3323	1	2	3	4	5	6	7	8	9	10	11	12	13	14.1	14.2	14.3	15	16	17	18	19	20	21	22	23	24	25	26	27	28	29	30	31	32	33	34	35	36	37.1	37.2	37.3	37.4	37.5	38.1	38.2	39.1	39.2	40	41
C110	●	●	●	●	●	●	●	●	●	●	●	●	●	●	●	●	●	●	●	●	●	●	●	●	●	●	●	●	●	●	●	●	●	●	●	●	●	●	●	●	●	●	●	●	●	●	●		

P Steel M Stainless Steel K Cast Iron N Non-Ferrous Metals S Titanium & Super Alloys H Hard Materials

● Optimal ○ Effective